PFR60L300PT
PFR60L300PT-L

PFC Device Corporation

60A 300V MOS Schottky Rectifier

Major ratings and characteristics

Characteristics	Values	Units
$I_{F(AV)}$ Rectangular Waveform	30 × 2	A
V_{RRM}	300	V
V_F@ 30A , Tj=125 °C	0.78	V, typ.
T_J Operating Junction Temperature	-65 to +175	°C

PFR60L300PT

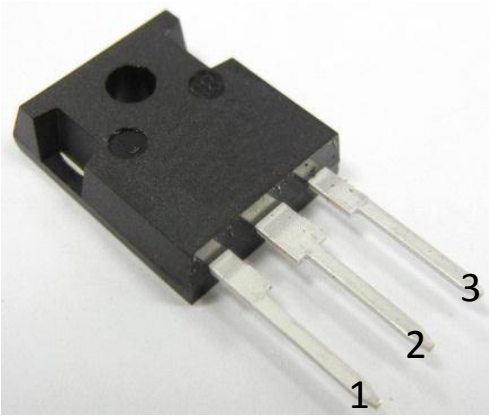

TO-247AB

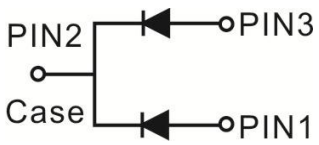

Features

- Low Forward Voltage Drop
- Reliable High Temperature Operation
- Softest, fast switching capability
- 175°C Operating Junction Temperature
- Lead Free Finish, RoHS Compliant

Typical Applications

Device optimized for low forward voltage drop to maximize efficiency in Power Supply applications

1. Characteristics

Maximum Ratings Characteristics (T_A = 25 °C unless otherwise specified)

Parameter	Symbol	Values	Units
DC Blocking Voltage	V_{RM}	300	Volts
Working Peak Reverse Voltage	V_{RWM}		
Peak Repetitive Reverse Voltage	V_{RRM}		
Average Rectified Forward Current Per device (Rated VR-20Khz Square Wave) - 50% duty cycle	I_o	60	Amps
Peak Forward Surge Current - 1/2 60hz	I_{FSM}	350	Amps
Peak Repetitive Reverse Surge Current (2uS-1Khz)	I_{RRM}	1	Amps
Typical Thermal Resistance (per leg)	$R\theta_{Jc}$	1.5	°C / W
Maximum Rate of Voltage Change (at Rated VR)	dv/dt	10000	V/uS
Operating Junction Temperature	T_J	- 65 to +175	°C
Storage Junction Temperature	T_{STG}	- 65 to +175	

Electrical Characteristics - (per leg) (T_A = 25 °C unless otherwise specified)

Parameter	Test Conditions		Symbol	Typ.	Max.	Units
Instantaneous Forward Voltage	IF = 30 A	T_J = 25 °C	VF*	----	0.96	Volts
		T_J = 125 °C		0.78	0.82	
Instantaneous Reverse Current	At V_{RM}	T_J = 25 °C	IR*	----	200	uA
		T_J = 125 °C		----	20	mA
* Pulse width < 300 uS, Duty cycle < 2%						

2. Characteristics Curves

Ratings and Characteristics Curves (TA = 25℃ unless otherwise specified)

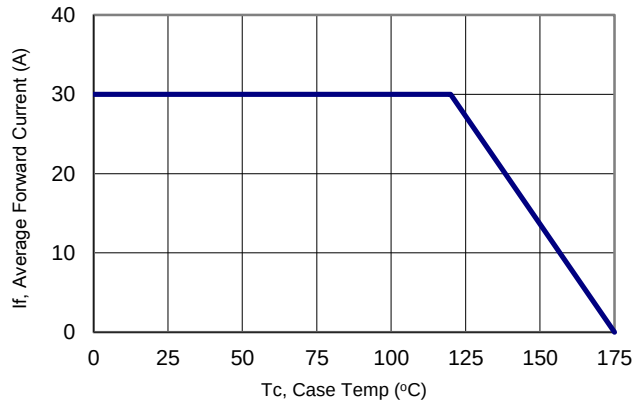

Figure 1: Current Derating, Case

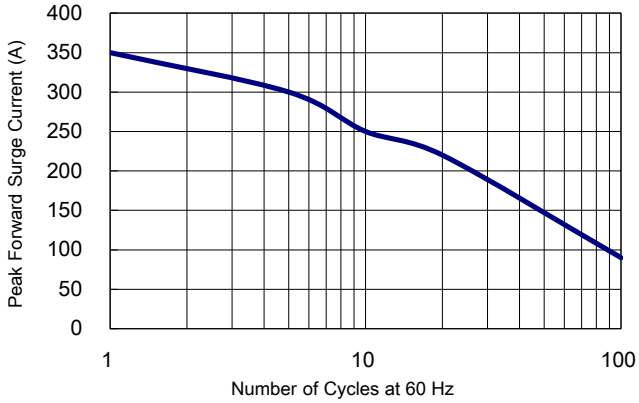

Figure 2: Maximum Repetitive Surge Current

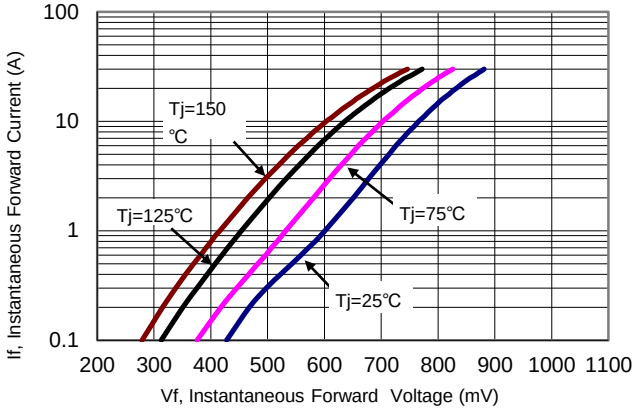

Figure 3: Typical Forward Voltage

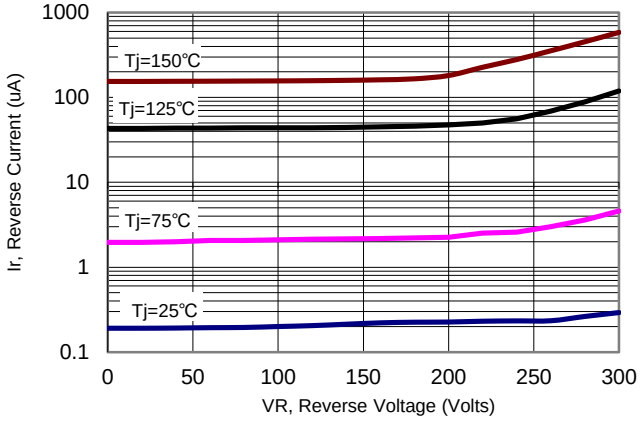

Figure 4: Typical Reverse Current

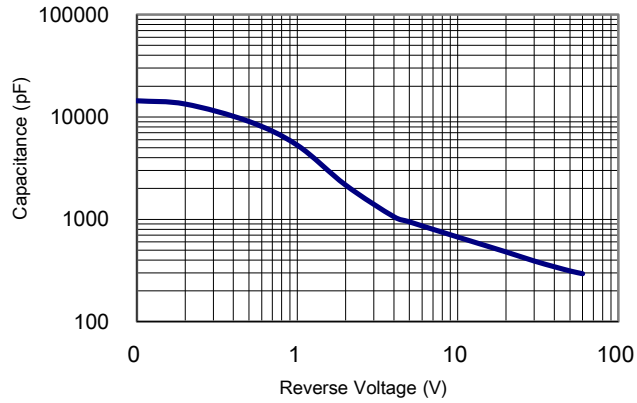

Figure 5: Typical Junction Capacitance

3. Marking information

Top Marking Rule

PFC PFR
60L300PT
YYWW ABH

PFR60L300PT = Product Type Marking Code

YYWW = Date Code

YY = Last two digits of year

WW = Week code

AB = Assembly code

H = Halogen Free (N/A = common molding compound)

4. Package information

Package Outline Dimensions millimeters

TO-247AB

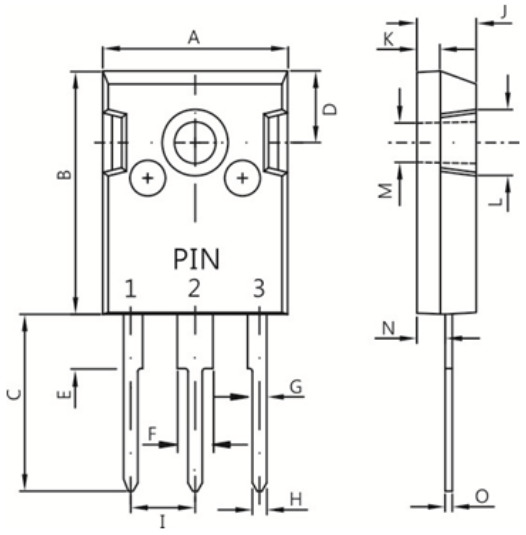

Dim.	Min.	Max.
A	15.20	16.00
B	19.13	20.87
C	13.00	16.00
D	5.50 Typ.	
E	3.85	4.15
F	2.80	3.20
G	1.70	2.30
H	0.88	1.52
I	5.45 Typ.	
J	4.66	5.34
K	1.17	1.37
L	4.00 Typ.	
M	3.60 Typ.	
N	2.20	2.60
O	0.42	0.58
All Dimensions in millimeter		

TO-247AB-L

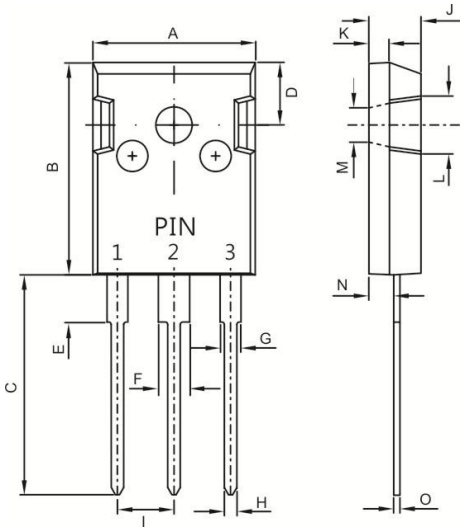

Dim.	Min.	Max.
A	15.45	16.25
B	20.30	21.75
C	19.60	20.10
D	6.50 Typ.	
E	4.50 Typ.	
F	2.80	3.40
G	1.80	2.20
H	1.00	1.40
I	5.45 Typ.	
J	4.85	5.15
K	1.90	2.10
L	3.50 Typ.	
M	3.20 Typ.	
N	2.20	2.60
O	0.51	0.76
All Dimensions in millimeter		

5. Ordering information

Part Number	Package	Delivery mode
PFR60L300PT	TO-247AB	30 pieces / tube
PFR60L300PT-L	TO-247AB-L(long lead)	30 pieces / tube

Note: For Halogen Free molding compound, add "H" suffix to part number above.

Mechanical

- Molder Plastic: UL Flammability Classification Rating 94V-0
- Device Weight : 0.16 ounces (4.53grams) - TO-247AB
  0.197 Ounces (5.6grams) – TO-247AB-L (long lead)
  Mounting Torque : 10 in-lbs maximum.

PFC Device Corp reserves the right to make changes without further notice to any products herein. PFC Device Corp makes no warranty, representation or guarantee regarding the suitability of its products for any particular purpose, nor does PFC Device Corp assume any liability arising out of the application or use of any product or circuit, and specifically disclaims any and all liability, including without limitation special, consequential or incidental damages. “Typical” parameters which may be provided in PFC Device Corp data sheets and/or specifications can and do vary in different applications and actual performance may vary over time. All operating parameters, including “Typical” must be validated for each customer application by customer’s technical experts. PFC Device Corp does not convey any license under its patent rights nor the rights of others. PFC Device Corp products are not designed, intended, or authorized for use as components in systems intended for surgical implant into the body, or other applications intended to support or sustain life, or for any other application in which the failure of the PFC Device Corp product could create a situation where personal injury or death may occur. Should Buyer purchase or use PFC Device Corp products for any such unintended or unauthorized application, Buyer shall indemnify and hold PFC Device Corp and its officers, employees, subsidiaries, affiliates, and distributors harmless against all claims, costs, damages, and expenses, and reasonable attorney fees arising out of, directly or indirectly, any claim of personal injury or death associated with such unintended or unauthorized use, even if such claim alleges that PFC Device Corp was negligent regarding the design or manufacture of the part.